O.P.S.™ Series Encoders

The New Standard for Performance and Value

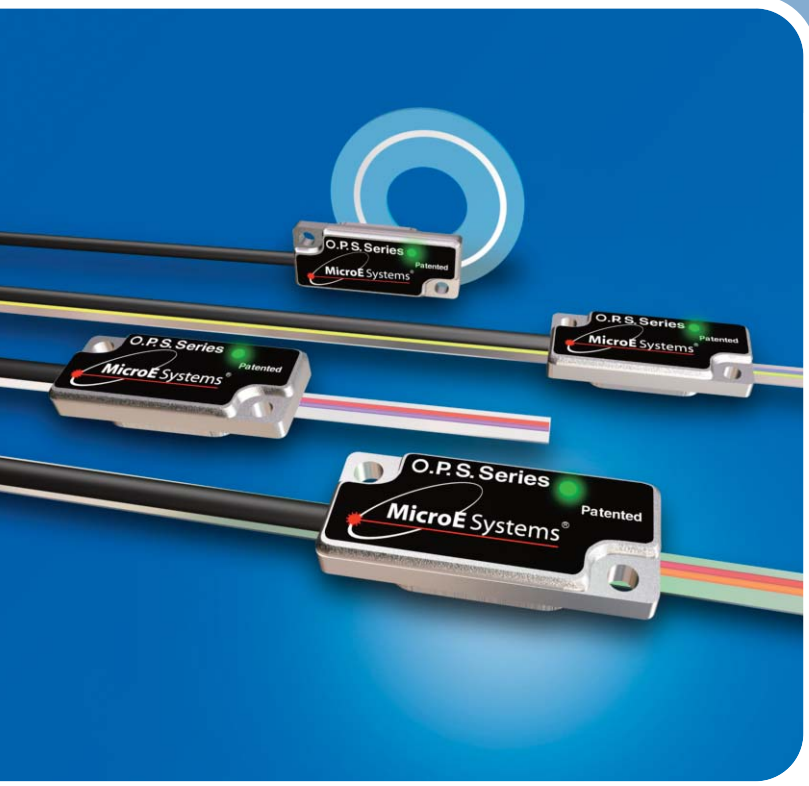

The O.P.S Series of optical encoders introduces a new level of performance and value. With all electronics in the sensor, O.P.S. enhances motion system precision and speed in linear or rotary applications, using fast-installing linear tape scales or rotary glass scales. Built-in interpolation enables resolutions up to 50nm, dual optical limits save cabling and reduce costs, and the status LED in the sensor reassures you that the encoder is operating correctly in real time. Automatic Gain Control in the sensor enhances long-term reliability and immunity to scale contamination.

Specifications

Resolution	Linear: 1µm, 0.5µm, 0.1µm or 50nm Rotary: 163k to 3.27M CPR
Linearity	Tape Scale: ≤ ± 5µm/m
Accuracy	Rotary: ± 3.9 arc-sec with 64mm OD scale
Cyclical Error	Tape Scale: ±40nm typical over any 20µm movement
Outputs	A-quad-B, Index Pulse, and Dual Limits
Scales	Same Sensor for Linear Tape or Rotary Glass

Available Models

O.P.S. Series Encoders feature interpolation up to x400 right in the sensor. Choose from four factory-set interpolation levels, all with digital outputs for A-quad-B, bi-directional 1 LSB optical index, and dual limits.

Model	Resolution	Output
O.P.S. 400	50nm	Digital
O.P.S. 200	0.1µm	Digital
O.P.S. 40	0.5µm	Digital
O.P.S. 20	1µm	Digital

The built-in status LED shows sensor alignment in real time.

MicroE Systems • 125 Middlesex Turnpike • Bedford, MA 01730 • USA
www.microesys.com info@microesys.com T. 781-266-5700

O.P.S.™ Series Encoders

The New Standard for Performance and Value

Specifications

Linear – 20µm Grating pitch

Interpolation	Resolution	Maximum Speed
x400	50nm/count	1500mm/s
x200	0.1µm/count	3000mm/s
x40	0.5µm/count	4500mm/s
x20	1.0µm/count	4500mm/s

Rotary - 20µm grating pitch

Rotary Glass Scale Diameter	Fundamental Resolution				
63.50mm	**8192 CPR**	**x20**	**x40**	**x200**	**x400**
	interpolated resolution (CPR)	163840	327680	1638400	3276800
	interpolated resolution (arc-sec/count)	7.91	3.96	0.791	0.396
	interpolated resolution (µrad/count)	38.3	19.17	3.83	1.917
	maximum speed (RPM)	1640	1640	1090	540

System

PurePrecision™ Marker Tape II and cut-to-length Laser Tape II scales are available in continuous lengths up to 30m. O.P.S. encoders require Marker Tape II or Laser Tape II with a non-reflective index and limit track.

Grating Period	20µm
Signal Period	20µm
System Resolution	1µm, 0.5µm, 0.1µm or 50nm (specify at time of ordering)

Output

Digital A-quad-B, 1LSB index pulse, left limit, and right limit. A, B and I outputs are differential. Index is gated to AB high.

Accuracy/Linearity

Tape Scale II Linearity	≤ ± 5µm/m
Cyclical Error	
Tape Scale	±40nm typical over any 20µm movement

Note: Accuracy is the maximum error over the specified movement when compared to a NIST-traceable laser interferometer standard, used at room temperature.

Rotary Accuracy*

Scale O.D.	Microradians	Arc-Seconds
63.50mm	± 19	± 3.9

*Based on ideal scale mounting concentricity

Sensor Status LED

The tri-color status LED in the sensor shows system status at all times.

Green = power is on, alignment is good. Blink off when passing over index.
Orange = alignment not optimal but encoder counting integrity is still good.
Red = alignment poor, discontinue use and realign sensor to scale.

MicroE Systems • 125 Middlesex Turnpike • Bedford, MA 01730 • USA
www.microesys.com info@microesys.com T. 781-266-5700

Specifications

Sensor Size

Height	Width	Length
8.93mm	13.49mm	32.00mm

Alignment Tolerances Z = ±0.15mm, $\theta_Z = \pm 2^\circ$

Operating and electrical specifications

Power Supply	5VDC ±5% @ 140mA when used with recommended termination (see installation manual)
Temperature	
Operating	0 to 70°C
Storage	-20 to 85°C
Humidity	10 to 90% RH non-condensing
EMI	CE Compliant
Shock	300G 0.5 ms half sine
Vibration	30G at 17Hz
Sensor Weight	6g (Sensor without cable)
Sensor Cable	Double Shield Maximum length 5m (contact MicroE Systems for applications >5m) Diameter 3.6mm (0.142") Flex Life 20x10⁶ cycles @ 20mm bending radius

Reliability information

5 Year Expected Reliability >99.8% under normal operating conditions

Output Signals

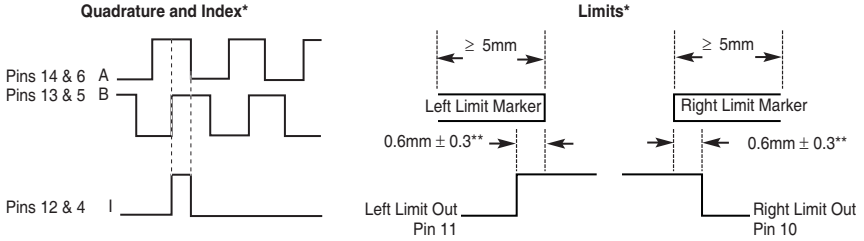

* Output signals are RS-422 compatible. A, B and I are >2V differential logic when terminated as recommended in the Installation Manual. Inverse signals are not shown for clarity. Limits are single-ended and <0.2V when low, >1.2V when high. Active Low configuration is shown.

**Above are with reference to the sensor's optical centerline (see interface drawings).

Dimensions

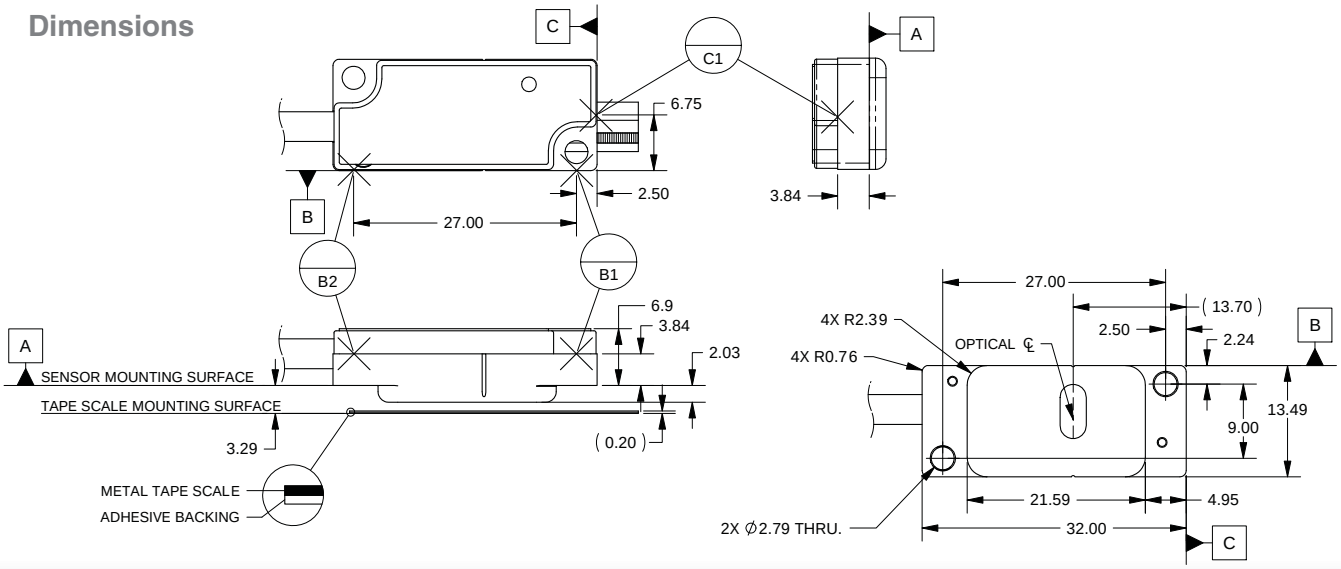

MicroE Systems • 125 Middlesex Turnpike • Bedford, MA 01730 • USA

www.microesys.com info@microesys.com T. 781-266-5700

PurePrecision™ Marker Tape II Scale

The Marker Tape II scale length that you specify for your application must be calculated as follows. This calculation applies when using 20mm end limits. Note that 5mm at each end of the tape scale is not to be used for encoder feedback.

Tape Scale Length = Measuring Length + 40mm*

Example: Measuring Length of 800mm is required, limits will be used at the end of the tape scale and end caps will not be used. The Tape Scale Length = 800mm + 40mm = 840mm.

*See Interface Drawings for other configurations.

Index and Limit Marker Locations (Dimensions in mm.)

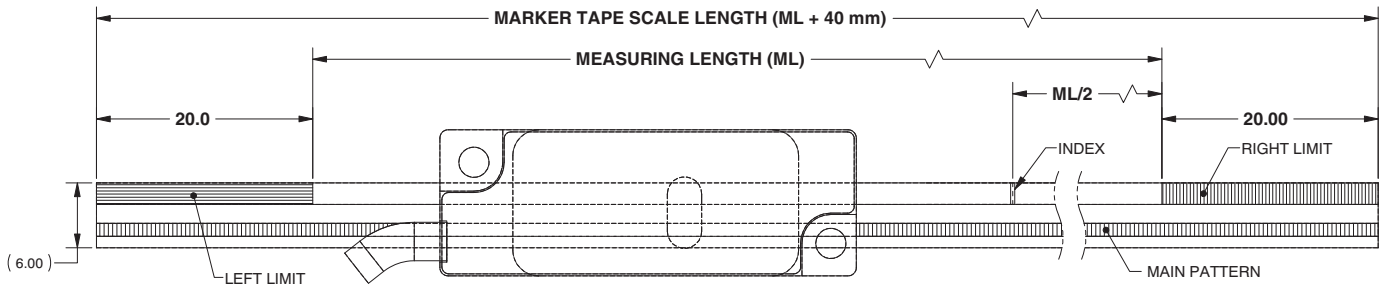

Marker Tape II with index and limit marks

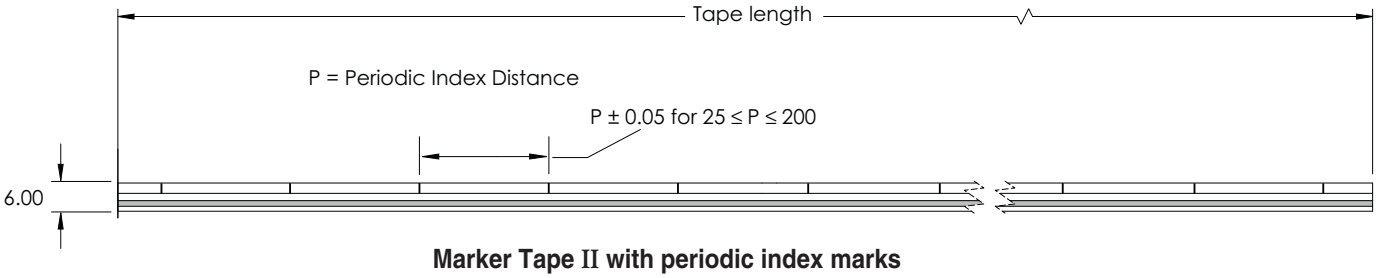

Marker Tape II with periodic index marks

Note: configurations above are only examples. For other limit lengths or index configurations contact MicroE Systems.

Specifications

Linearity	≤ ±5µm/m
Material	Inconel 625
Typical CTE	13ppm/°C; thermal behavior of the tape scale is typically matched to the substrate using epoxy at the ends of the tape scale

MicroE Systems • 125 Middlesex Turnpike • Bedford, MA 01730 • USA

www.microesys.com info@microesys.com T. 781-266-5700

PurePrecision™ Laser Tape II Scale with Stick-On Index and Limits

The Laser Tape II scale length that you specify for your application must be calculated as follows. This calculation applies when using the standard 20mm stick-on limit markers. Note that 5mm at each end of the tape scale is not to be used for encoder feedback.

Tape Scale Length = Measuring Length + 40mm*

Example: Measuring Length of 800mm is required, limits will be used at the end of the tape scale and end caps will not be used. The Tape Scale Length = 800mm + 40mm = 840mm.

*When the end limits are at the ends of the tape scale and end caps are not used. The Tape Scale Length must be increased further if the limit markers are applied at a distance from the ends of the tape scale.

Index and Limit Marker Locations (Dimensions in mm.)

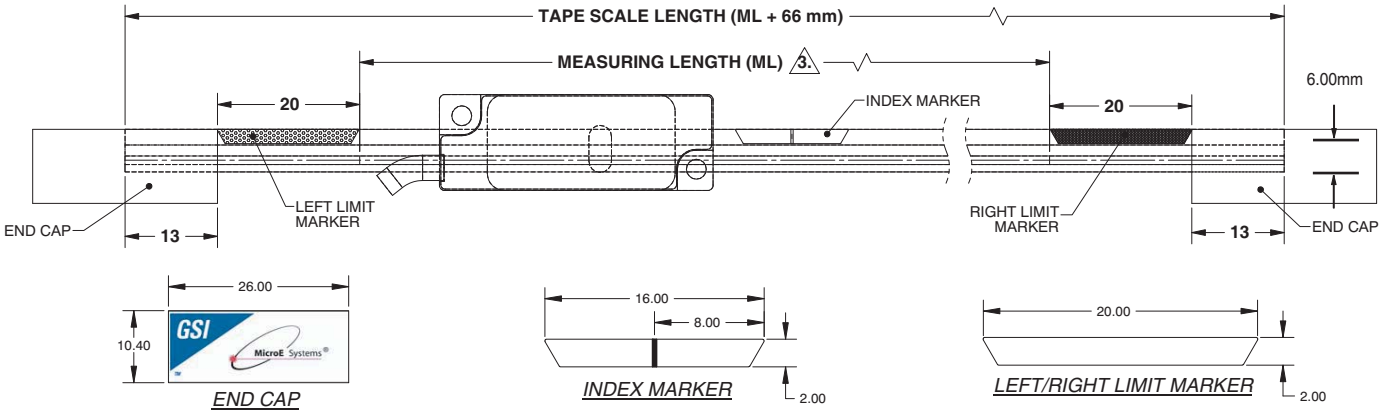

3 = Minimum Measuring Length Shown. Actual Measuring Length May Be Greater.

Specifications

Linearity	≤ ±5µm/m
Material	Inconel 625
Typical CTE	13ppm/°C; thermal behavior of the tape scale is typically matched to the substrate using epoxy at the ends of the tape scale

Rotary Glass Scales with Built-in Index

Standard Rotary Scales

Specifications

Material	Soda lime glass
Typical CTE	8ppm/°C

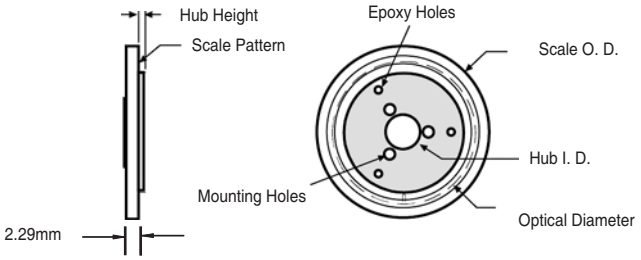

Dimensions in mm

Model No.	Fundamental CPR	Scale Outer Diameter	Scale Inner Diameter	Optical Diameter	Hub Inner Diameter +0.013mm/-0.0000	Hub Height
R6425NR	8192	63.50mm	25.40mm	52.15mm	12.708mm	1.52mm

Hub mounting and custom scales are available, including larger diameters

MicroE Systems • 125 Middlesex Turnpike • Bedford, MA 01730 • USA
www.microesys.com info@microesys.com T. 781-266-5700

How to Order

O.P.S. Series Encoders

OPS 400 – 3 – 1

- Limit Outputs
  - 1 = Active Low
  - 2 = Active High
  - 3 = Disabled
- Cable Length
  - 1 = 1.0m
  - 3 = 3.0m
  - 5 = 5.0m
- Interpolation (Resolution)
  - 20 = x20 (1µm)
  - 40 = x40 (0.5µm)
  - 200 = x200 (0.1µm)
  - 400 = x400 (50nm)

Alignment Tool

Required for setup.

AT – OPS	Alignment Tool for O.P.S. encoders including power supply for 100V - 240VAC with US 2-prong plug

Rotary Glass Scales

R6425NR – HJ

- NH = Without Hub
- HJ = With Hub for R6425NR

Marker Tape II

HPMT – N – A – L – 5000 – I

- I = Individual Lengths
  - C = Continuous
- Length in mm (40mm - 5000mm); contact MicroE Systems for Marker Tape II lengths >5000mm
- L = Center Index and End Limits
  - I = Center Index Only
  - C = Custom

Laser Tape II

HPTS – 25000 – N

- Length in mm (40mm - 30000mm)

Index Markers for Laser Tape II

NRIMS	Qty. 8 Stick-On Index Markers

Limit Markers for Laser Tape II

NRLMS	Qty. 4 Stick-On Left Limit Markers and Qty. 4 Stick-On Right Limit Markers

All specifications subject to change.

MicroE Systems • 125 Middlesex Turnpike • Bedford, MA 01730 • USA

www.microesys.com info@microesys.com T. 781-266-5700

© 2013 MicroE Systems