Laser Focus Sensor

for Nanopositioning and Nanomeasuring Machine

Description

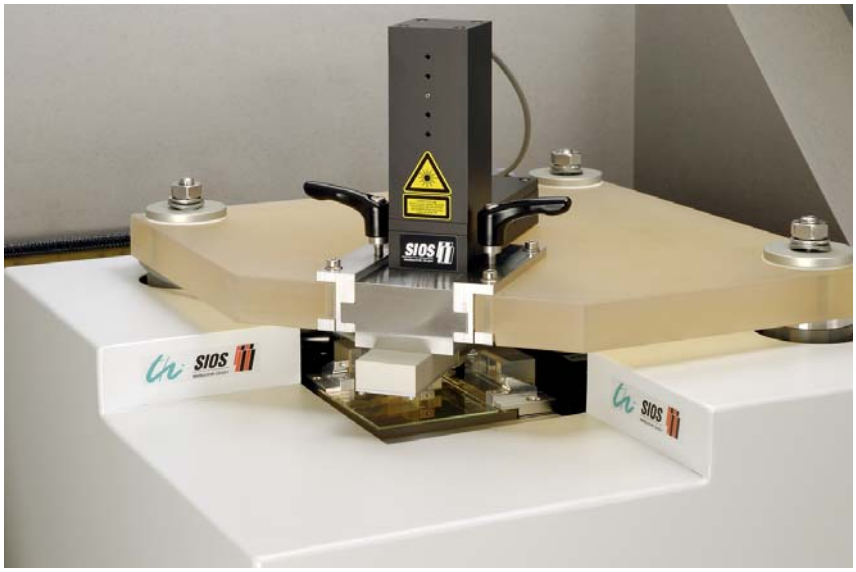

SIOS Meßtechnik GmbH
Am Vogelherd 46
98693 Ilmenau / GERMANY
Tel.: +49-3677-64470
Fax: +49-3677-64478
Email: info@sios.de
Internet: http://www.sios.de

Edition:
Nov 2011

SIOS Meßtechnik GmbH

BEFORE YOU BEGIN

Read this users' guide through carefully before commencing to use the instrument.

Failing to follow the instructions and observe the precautions appearing in this users' guide might cause safety hazards or conditions that could lead to personal injuries and/or damage the instrument.

Although this guide has been prepared with the utmost care, no liability is assumed for any errors or omissions. We retain the right to alter those products described herein and their specifications at any time without prior notice.

WARRANTY

Those items of equipment described herein are warranteed for a period of one (1) year from date of shipment. All rights to claim warranty shall be voided in the event that said items of equipment have been opened, mishandled, or used for other than their intended purposes.

SIOS Meßtechnik GmbH
Am Vogelherd 46
D-98693 Ilmenau
Tel: +49-(0)3677-6447-0
Fax: +49-(0)3677-6447-8

U S E R ' S G U I D E

LFS-Series Laser Focus Sensor

Contents

1 Items Included 4

2 Safety Precautions 5

3 Principles of Operation 6

4 Power-Supply/ Amplifier Unit 9

5 Technical Data 10

1 Items Included

The following items are included as standard equipment with fix focus sensors for nanopositioning and nanomeasuring machines:

1. sensor head
2. power-supply/amplifier unit
3. line cord
4. sensor cable

Optional accessories:

5. camera system
6. light source
7. monitor with cable

2 Safety Precautions

The power-supply/amplifier unit uses high voltages for its operation. The interior of the power-supply/amplifier unit thus harbors electrical hazards due to the presence of the line voltage and high voltages. The power-supply/amplifier unit and sensor head should thus be opened only by persons who have been trained by SIOS Meßtechnik GmbH.

Caution!	Failure to observe these notices could lead to serious health hazards or eye injuries, including blinding.

The safety regulations to be observed by manufacturers and users of laser devices are those specified under EN 60825-1:1994 (VDE 0837, Part 1). All provisions of this standard related to the design and construction of laser systems have been observed in engineering both instruments.

Note:	All safety regulations stipulated under EN 60825-1:1994 (VDE 0837, Part 1) should be observed at all times while the laser is operational.

To gain access to the laser and its fiberoptic coupler, remove the screws fastening the rear panel of the power-supply/amplifier unit to the unit and remove the panel.

Note:	Make certain that the sensor cable has been connected to the power-supply/ amplifier unit before switching on the line voltage. !

3 Principles of Operation

SIOS Messtechnik GmbH's LFS-01 Laser-Focus System is a laser-aided metrological system that has been designed for the noncontacting, optical, profiling of surfaces having various finishes. The sensor has been designed for incorporation into SIOS Meßtechnik GmbH's NMM-01 nanopositioning and nanomeasuring machine. Therefore the LFS-01's metrological properties have been defined in terms of the NMM-01's positioning accuracy.

The basic structure of the entire focus sensor is shown in Fig. 1. In order to be able to trace the point of the optical scanning on the sample surface, the focus sensor can be combined with a CCD camera microscope. This allows a very comfortable discovery and also the later retrieval of interesting regions on the sample surface.

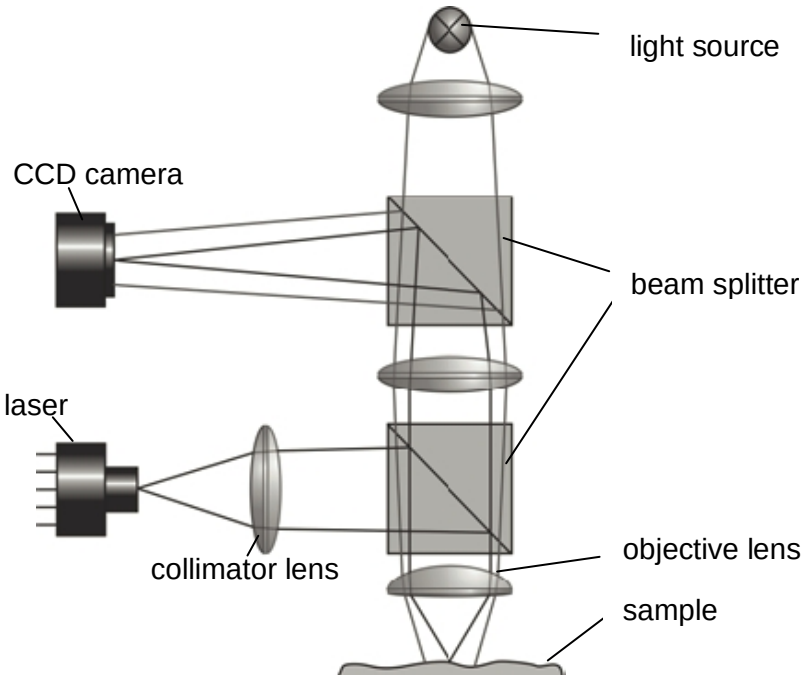

Fig. 1: The basic structure of the laser focus sensor

The electronic system of the focus sensor consist of the circuit for driving the laser diode and the circuit for the focus error signal generation.

The LFS-01's sensor's mode of operation is illustrated in Fig. 2. The reflected laser beam is projected onto a quadrant-photodiode detector. The arrangement of the detector's segments may vary, depending upon the optical configuration employed. However, that has no effect on the sensor's principle of operation. The astigmatic optics employed generate the laser-irradiance distributions on the detector illustrated below, where the distribution obtained will depend upon whether the surface being profiled is situated at their focal point or out of focus. As illustrated in Fig. 2, a sharp-focus signal may be extracted from the irradiance distribution using suitable electronic circuitry.

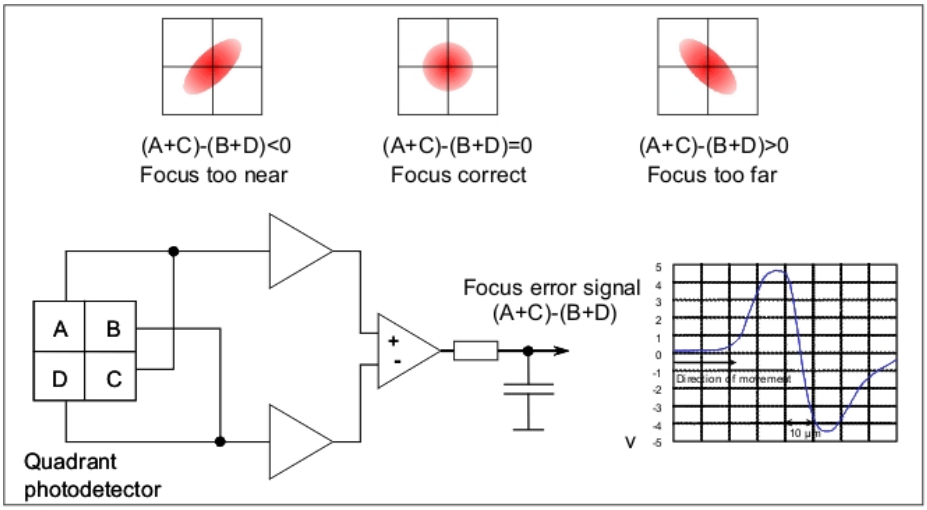

Fig. 2: The measuring principle of LFS-01 sensors

Figure 3 shows the typical characteristic line of the focus sensor. The optical system was dimensioned such that a measuring range of about ± 3 µm is achieved. By means of the A/D converter used in NMM-01, a resolution of the zero point of 1 nm is possible. The high resolution of the focus sensor is determined also by the high-precision optical adjustment and some special solutions in the electronic parts.

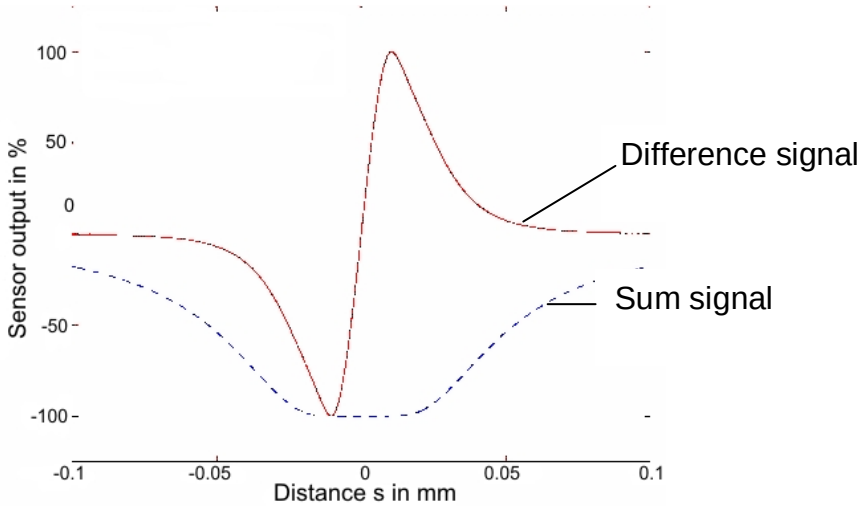

Fig. 3: The typical characteristic line of the focus sensor

The nanopositioning and nanomeasuring machine with integrated focus sensor and the microscope can be seen in Fig. 4. The focus sensor is mounted below the cover of the machine; the microscope is fixed above the cover. The light for illuminating the camera is supplied by a cold light source via optical fiber in order to minimize the heat input into the nanopositioning and nanomeasuring machine.

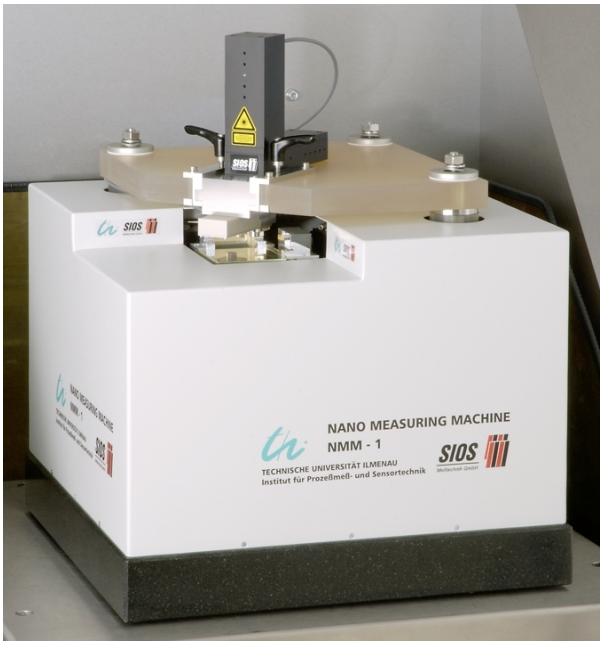

Fig. 4: The NMM-1 with integrated focus sensor

4 Power-Supply/ Amplifier Unit

sensor plug

amplification factor

camera plug

on/off switch

1	1x
2	2x
3	4x
4	8x
5	1x

Fig. 5: Front view of the power-supply/amplifier unit

mains plug

camera output

sensor output

Fig. 6: Back view of the power-supply/amplifier unit

Pin assignments for the 9-pin sub-D-connector:

1 Sum signal

2 Difference signal

3 Ground

4 Not used

5 Ground

6 Unamplified difference signal

7 Not used

8 Ground

9 Unused

5 Technical Data

The sensor has been designed for incorporation into SIOS Meßtechnik GmbH's NMM-01 Nanometrology and Nanopositioning System. The technical data listed below thus apply solely to the case where the sensor has been incorporated into an NMM-01.

Wavelength	650 nm
Numerical aperture	0.6
Spot diameter	0.8 µm
Working distance	1.5 mm
Measuring speed	1 mm/s
Total measuring range	3.0 µm (depends on measuring surface)
Resolution	1 nm
Minimum surface reflectivity	4 %
Laser output power	< 0.5 mW

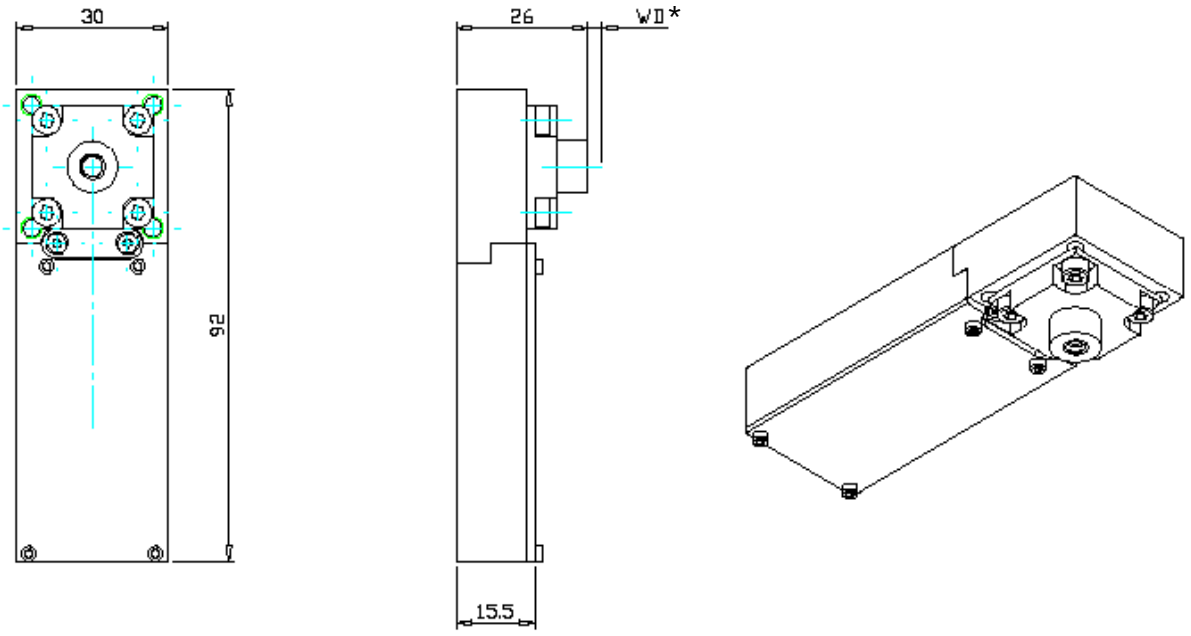

Fig. 7: Laser focus sensor without camera system

*WD – working distance;

standard 1.5 mm

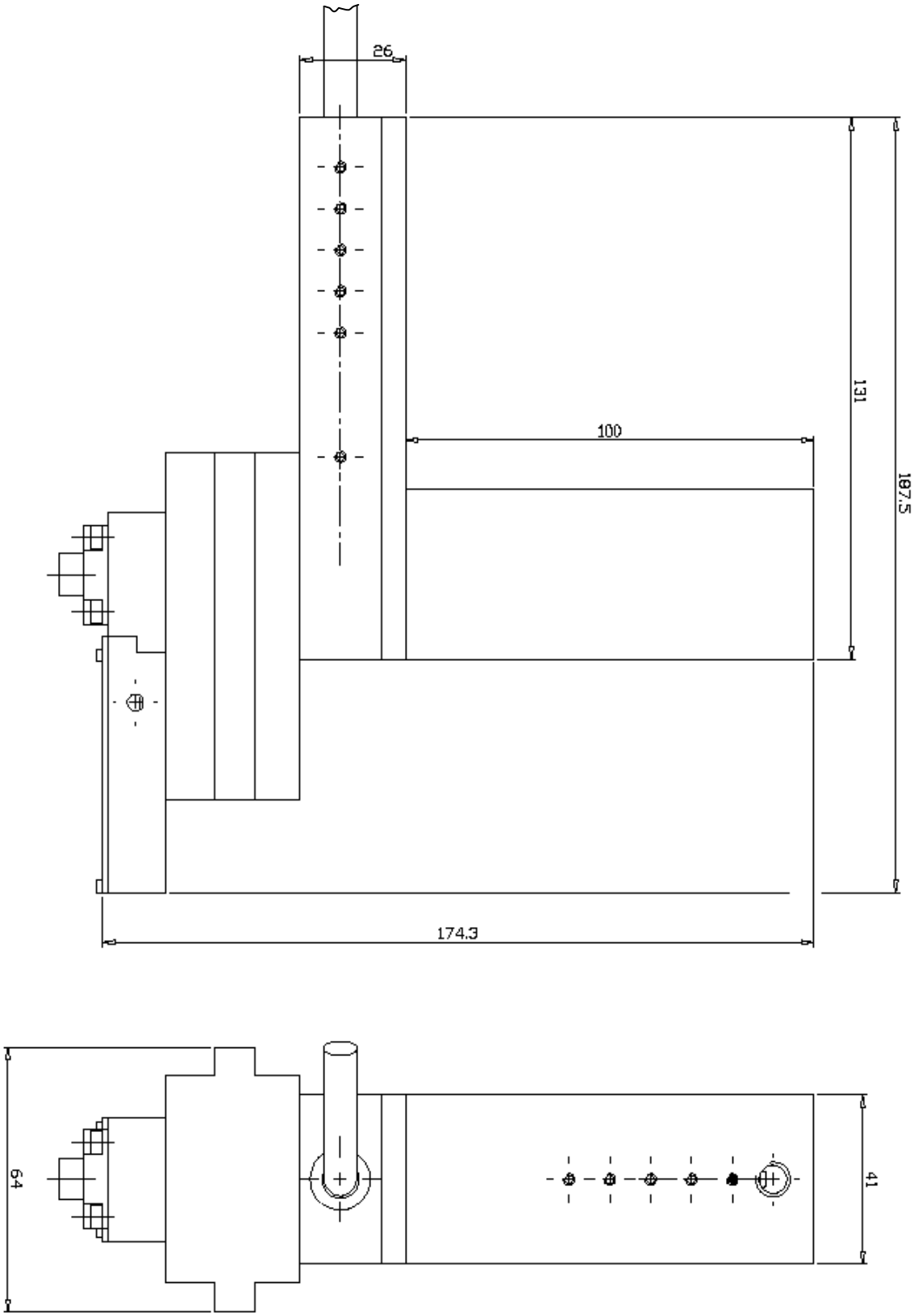

Fig. 8: Laser focus sensor with camera system and adapter for application in NMM-1